Technical data sheet

Clamp clip, single, metal pressure trough

Item no. 1158031

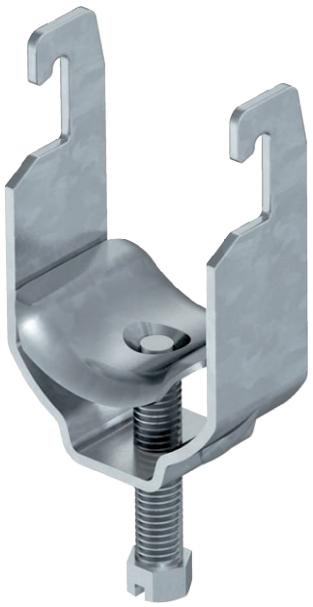

Suitable for all C profile rails with slot width 18 mm and 22 mm.

CE 18 22 U E30 E90

St Steel

FT Hot-dip galvanised

Master data

Item no.	1158031
Type	2056U M 28 FT
Description 1	Clamp clip
Description 2	with metal pressure sump
Dimension	22-28mm
Material	Steel
Material symbol	St
Surface	Hot-dip galvanised
Surface to DIN	DIN EN ISO 1461
Surface symbol	FT
Smallest sales unit (VG)	100 Piece
Weight	5,89 kg/100 pc.

Technical data

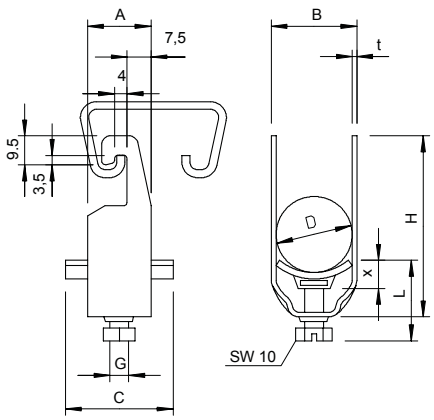

Dimension A	20,00 mm
Dimension B	33,00 mm
Dimension C	34 mm
Dimension G	M6
Dimension H	59,00 mm
Dimension L	34,00 mm
Dimension t	2,00 mm
Dimension x	5,00 mm
Number of cables/pipes	1
Max. tightening torque	3,00 Nm
for pipe diameter	25 mm
for rail with slot width	18,00 - 22,00 mm
Halogen-free	☐
With plastic trough	☐
With metal trough	☑
Mounting type	Profile rail
Impact-resistant	☐
Clamping range D	22,00 - 28,00 mm

Technical data sheet

Clamp clip, single, metal pressure trough

Item no. 1158031

Technical data

Surface addition	hot galvanised
Material addition	Steel