Technical data sheet

Fix ISO tensioning wire clip

Item no. 2307638

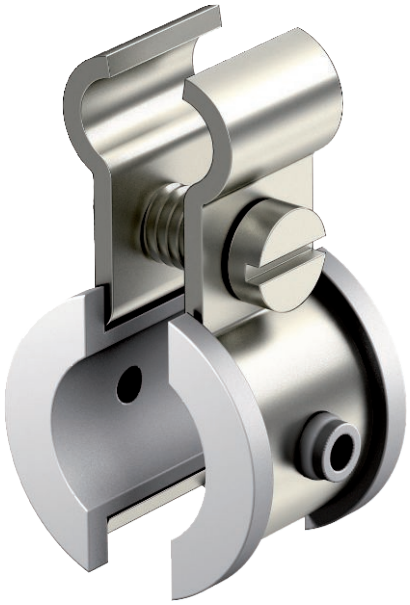

The cable and pipe fastenings of the special system include cable ties, fastening straps and installation strips, with which cable and pipe installations can be fastened to cable support systems such as cable or mesh cable trays or other mounting constructions. A complete tensioning wire system to suspend and catch cable weights is also a component part of the special system.

VA	Stainless steel, rustproof 1.4571
2B	Bright, reworked

Master data

Item no.	2307638
Type	4021 K 9-16 A4
Description 1	Tensioning wire clip
Description 2	with plastic inserts
Dimension	9-16mm
Material	Stainless steel, material no. 1.4571
Material symbol	A4
Surface	Bright, reworked
Surface symbol	2B
Smallest sales unit (VG)	100 Piece
Weight	1,46 kg/100 pc.

Technical data

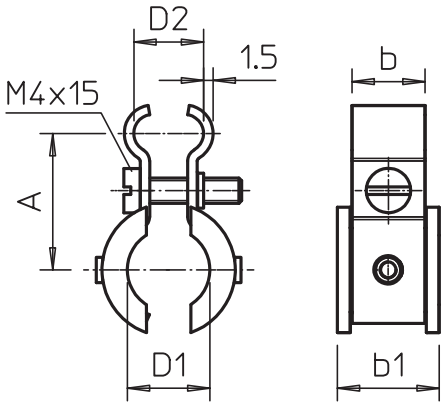

Dimension A	26,00 mm
Dimension b	14,00 mm
Dimension b1	18,30 mm
Number of cables/pipes	1
Version for	Not insulated
for rope diameter	4,00 - 9,00 mm
Bolt	M4x16
Clamping range D	9,00 - 16,00 mm